Kinematics, Kinematics Chains
CS 685

Previously

- Representation of rigid body motion
- Two different interpretations
  - as transformations between different coord. frames
  - as operators acting on a rigid body
- Representation in terms of homogeneous coordinates
- Composition of rigid body motions
- Inverse of rigid body motion

Rigid Body Transform

Translation only t_{AB} is the origin of the frame B expressed in the Frame A

$$\mathbf{X}_A = \mathbf{X}_B + t_{AB}$$

Composite transformation:

$$\mathbf{X}_A = R_{AB}\mathbf{X}_B + t_{AB}$$

Transformation: $T = (R_{AB}, t_{AB})$

Homogeneous coordinates

$$\mathbf{X}_A = \begin{bmatrix} R_{AB} & t_{AB} \\ 0 & 1 \end{bmatrix} \mathbf{X}_B$$

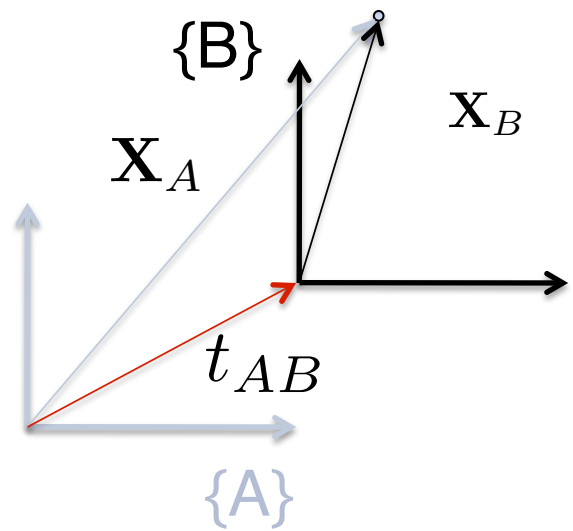

The points from frame A to frame B are transformed by the inverse of $T = (R_{AB}, t_{AB})$ (see example next slide)

Kinematic Chains

- We will focus on mobile robots (brief digression)
- In general robotics - study of multiple rigid bodies lined together (e.g. robot manipulator)
- Kinematics – study of position, orientation, velocity, acceleration regardless of the forces
- Simple examples of kinematic model of robot manipulator and mobile robot
- Components – links, connected by joints

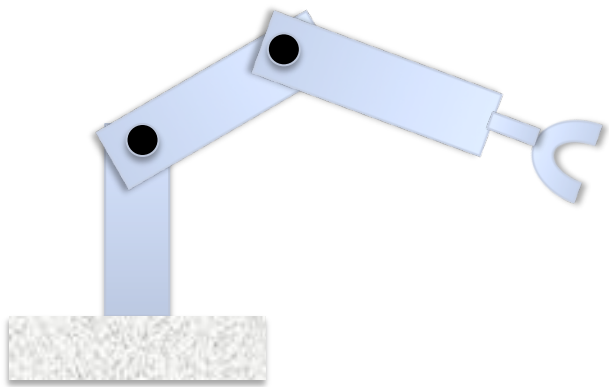

Various joints

- In general rigid bodies can be connected by various articulated joints

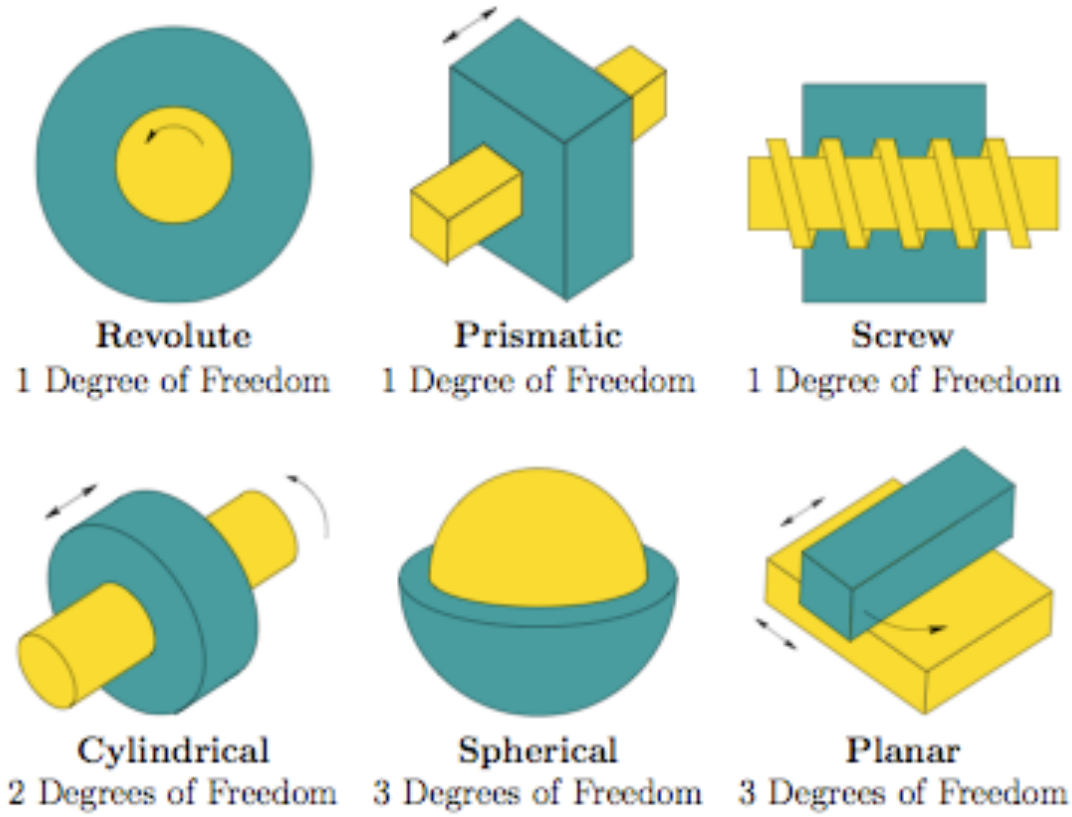

Kinematic Chains

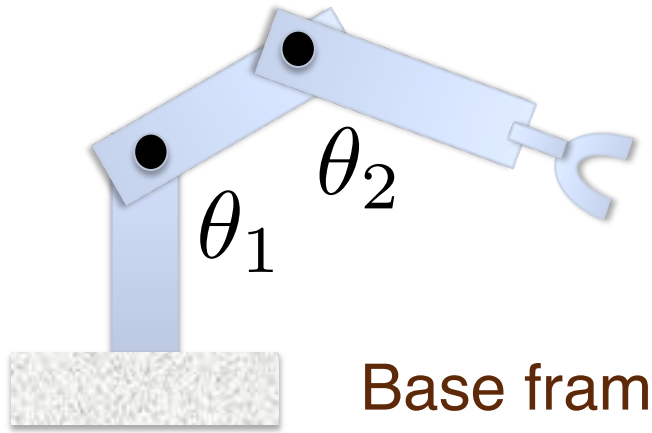

$$\begin{bmatrix} X \\ Y \end{bmatrix}$$

Tool frame

Base frame

- Given θ_1, θ_2 determine what is X, Y
- Given $\dot{\theta}_1, \dot{\theta}_2$ determine what is $\dot{X}, \dot{Y}$
- We can control θ_1, θ_2 want to understand how it affects position of the tool frame
- How does the position of the tool frame change as the manipulator articulates
- Actuators change the joint angles

Forward kinematics for a 2D arm

- Find position of the end effector as a function of the joint angles

$$f(\theta_1, \theta_2) = \begin{bmatrix} X \\ Y \end{bmatrix}$$

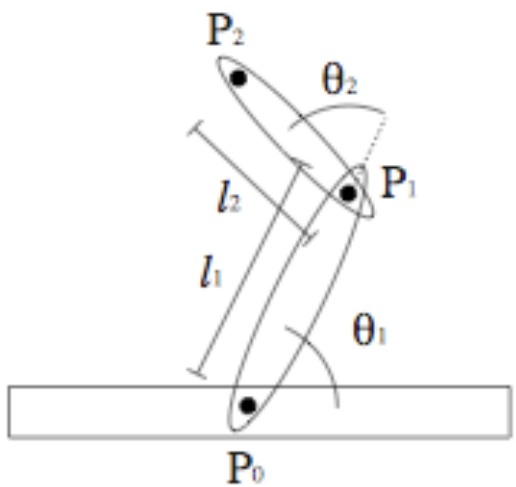

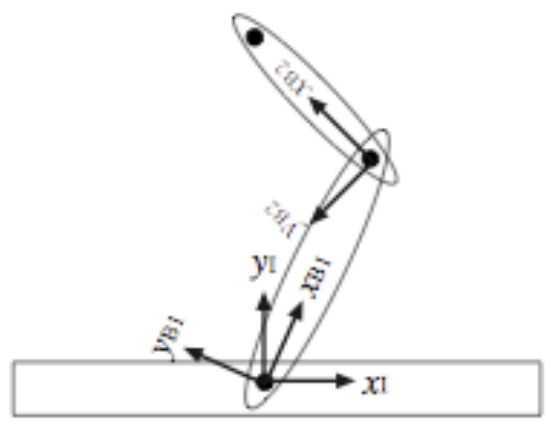

- Blackboard example

Kinematic Chains in 3D

- Additional joints possible (spherical, screw)
- Additional offset parameters, more complicated
- Same idea: set up frame with each link
- Define relationship between links (two rules):

  - use Z-axis as an axis of a revolute joint

  - connect two axes shortest distance

In 2D we need only link length and joint angle to specify the transform

In 3D $d_i, \theta_i, a_{i-1}, \alpha_{i-1}$ Denavit-Hartenberg parameters (see LaValle (chapter [3])

Inverse kinematics

- In order to accomplish tasks, we need to know given some coordinates in the tool frame, how to compute the joint angles
- Blackboard example (see handout)
- Use trigonometry to compute θ_1, θ_2

given *[X, Y]* of the end effector

- Solution may not be unique

Jacobians

- Kinematics enables us study what space is reachable
- Given reachable points in space, how well can be motion of an arm controlled near these points
- We would like to establish relationship between velocities in joint space and velocities in end-effector space
- Given kinematics equations for two link arm

$$\begin{aligned} x &= f_x(\theta_1, \theta_2) \\ y &= f_y(\theta_1, \theta_2) \end{aligned}$$

- The relationship between velocities is
- manipulator Jacobian $J(\theta_1, \theta_2)$

$$\begin{bmatrix} \dot{x} \\ \dot{y} \end{bmatrix} = \begin{bmatrix} \frac{\partial x}{\partial \theta_1} & \frac{\partial x}{\partial \theta_2} \\ \frac{\partial y}{\partial \theta_1} & \frac{\partial y}{\partial \theta_2} \end{bmatrix} \begin{bmatrix} \dot{\theta}_1 \\ \dot{\theta}_2 \end{bmatrix} \quad \begin{bmatrix} \dot{x} \\ \dot{y} \end{bmatrix} = J(\theta_1, \theta_2) \begin{bmatrix} \dot{\theta}_1 \\ \dot{\theta}_2 \end{bmatrix}$$

Manipulator Jacobian

- Determinant of the Jacobian
- If determinant is 0, there is a singularity

- Manipulator kinematics: position of end effector can be determined knowing the joint angles
- Actuators: motors that drive the joint angles
- Motors can move the joint angles to achieve certain position
- Mobile robot actuators: motors which drive the wheels
- Configuration of a wheel does not reveal the pose of the robot, history is important

Locomotion of wheeled robots

- Power the motion from place to place
- Differential Drive (two powered wheels)
- Car Drive (Ackerman Steering)

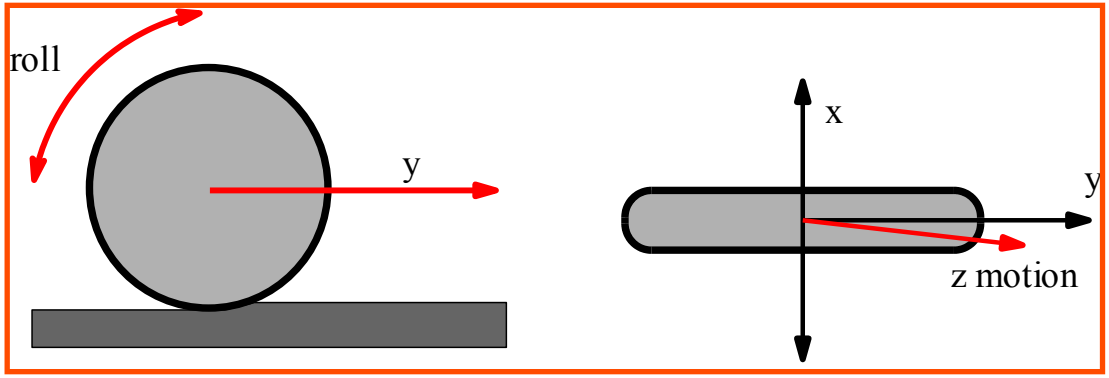

we also allow wheels to rotate around the z axis

Locomotion of wheeled robots

- Differential Drive (two powered wheels)

- Each wheel is has its own motor
- Two wheels can move at different speeds

Mobile robot kinematics

- Two wheels, with radius r
- Point P centered between two wheels is the origin of the robot frame
- Distance between the wheels l

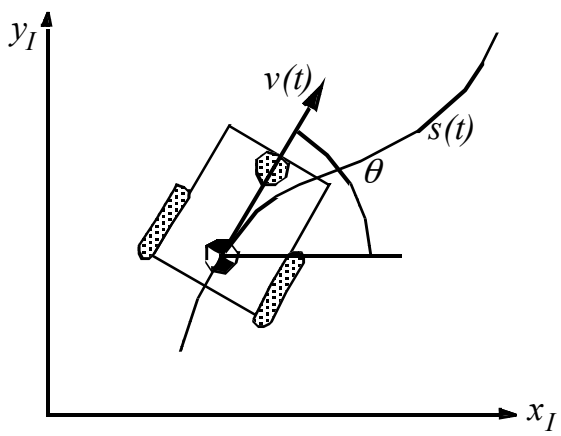

Differential Drive

- Controls: Instantaneous linear velocity of each wheel v_l, v_r
- Left and right wheel can move at different speed
- Robots coordinate system attached to the robot (heading in the x-direction)
- Parameters, distance between the wheels *l*

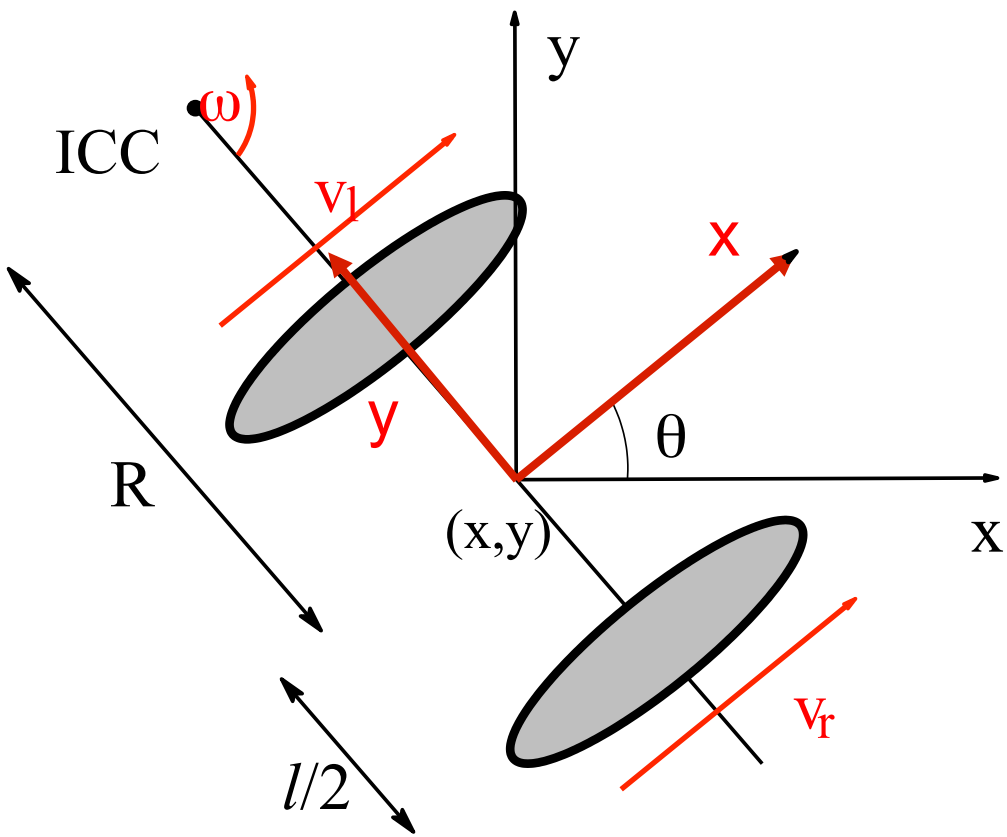

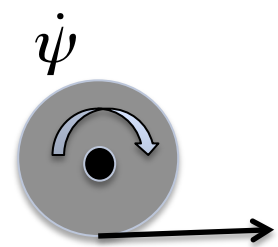

$$v_r = \dot{\psi} r$$

r – wheel radius

Differential Drive

- Controls: Instantaneous linear velocity of each wheel v_l, v_r
- Motion of the robot
- Turn in place $v_r = -v_l \rightarrow R = 0$
- Go straight $v_r = v_l \rightarrow \omega = 0$

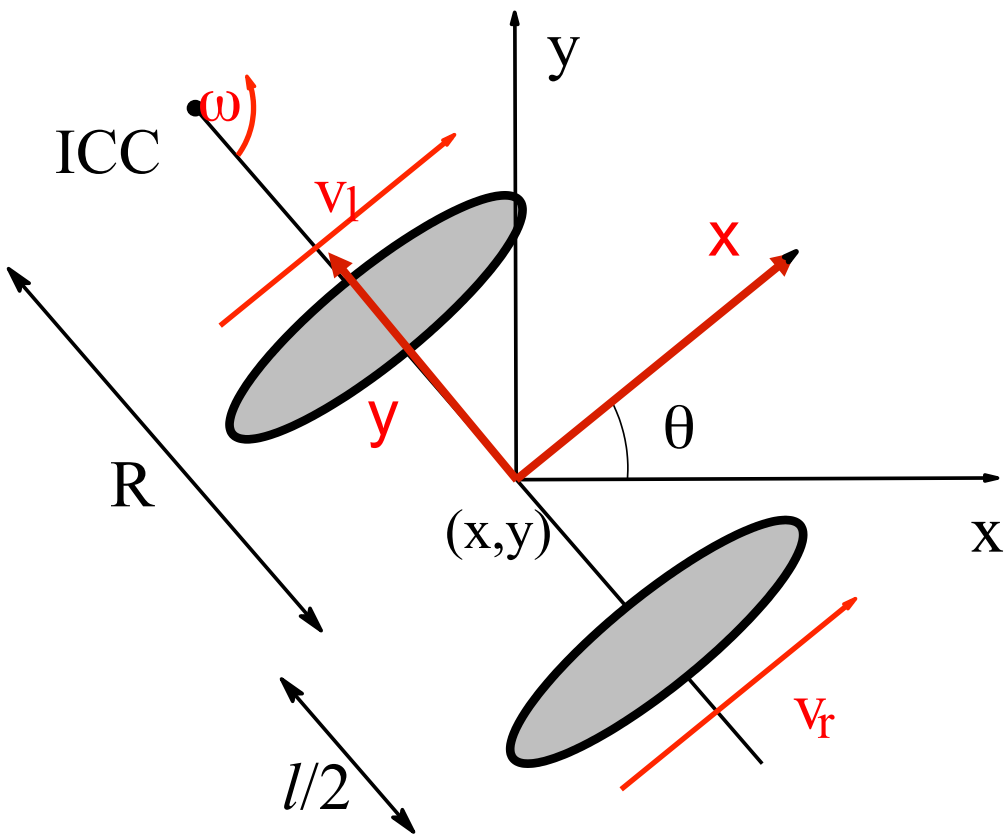

Differential Drive

- Turn in place $v_r = -v_l \rightarrow R = 0$
- Go straight $v_r = v_l \rightarrow \omega = 0$
- More general motion, turning and moving forward
- There must be a point that lies on the wheel axis that the robot rotates around

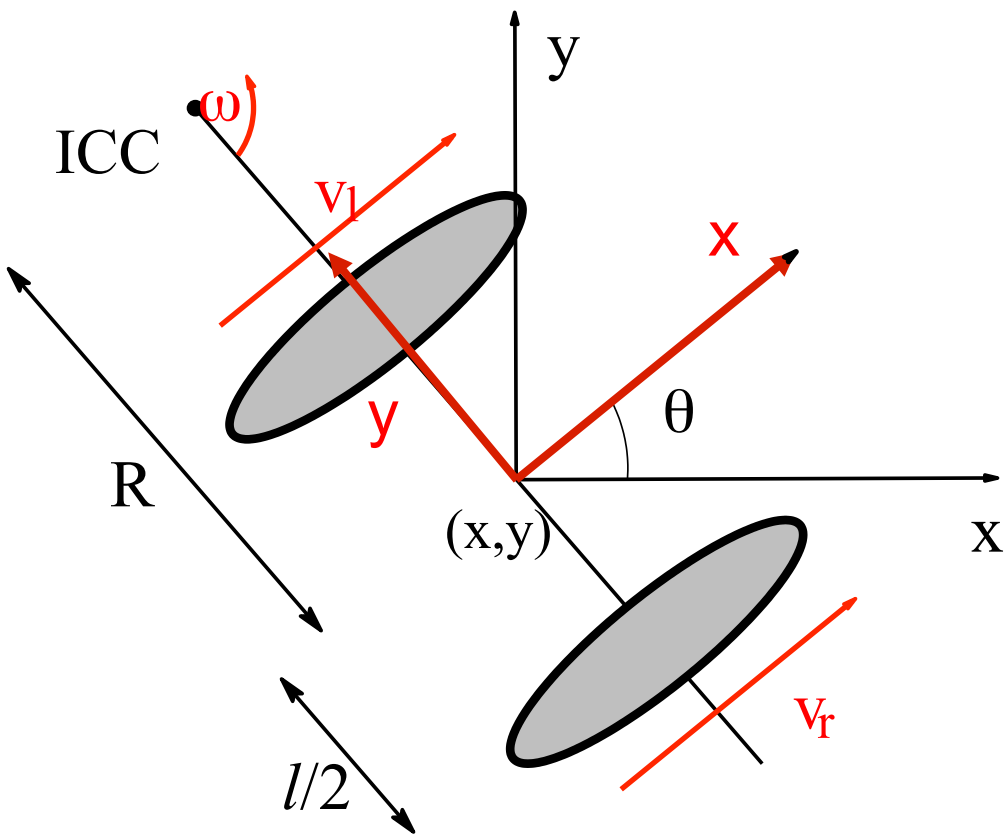

Instantaneous Center of Curvature

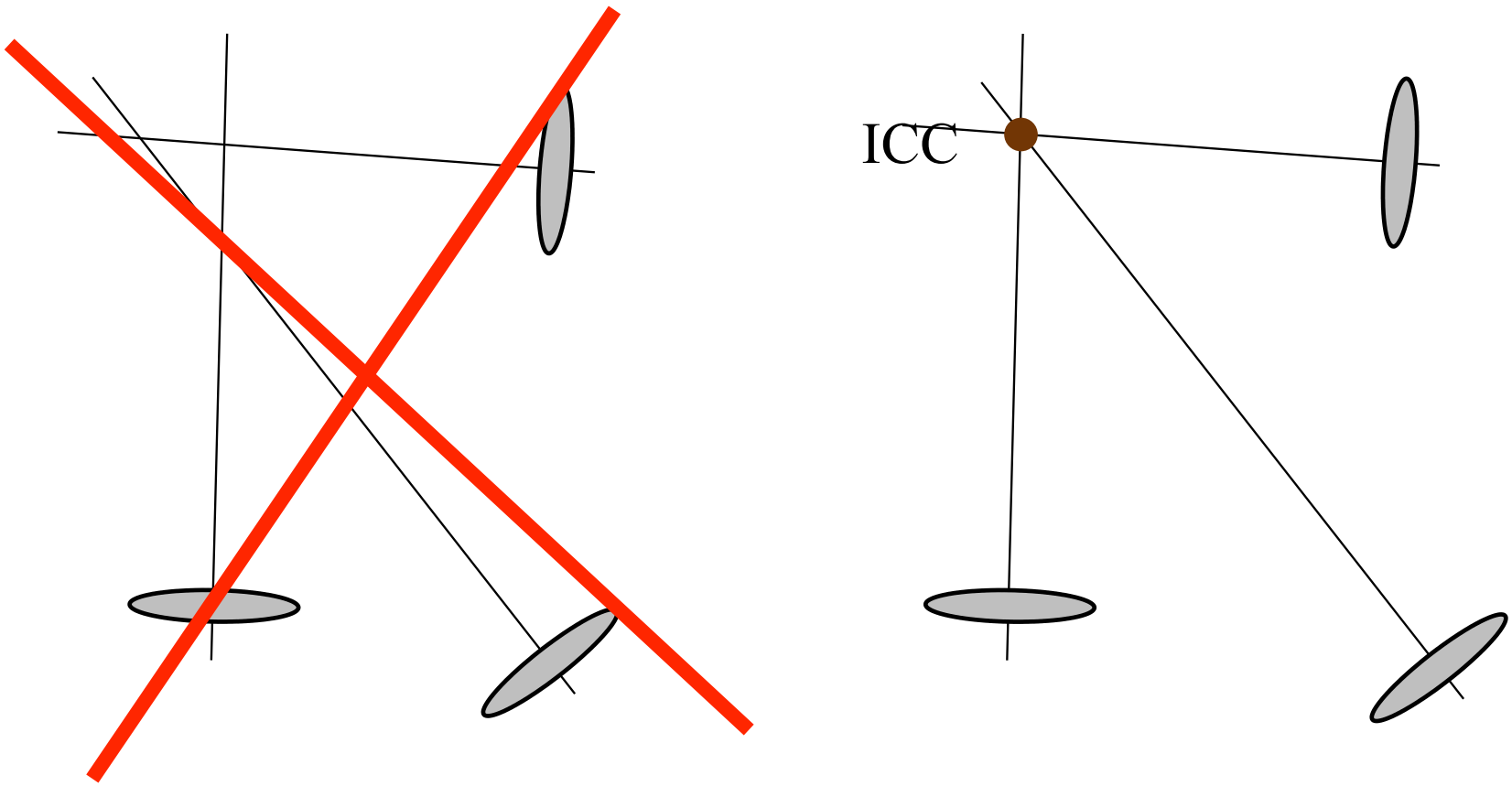

- When robot moves on a curve with particular linear and angular velocity at each instance there is a point called instantaneous center of curvature

Differential Drive

Instantaneous linear velocity of each wheel v_l, v_r

$$\omega(R + l/2) = v_r$$

$$\omega(R - l/2) = v_l$$

Forward velocity of the Wheel of radius r as it turns with angular rate $\dot{\psi}$

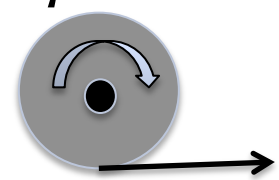

$$v_r = \dot{\psi} r$$

Is the angular velocity of the robots body frame Around ICC

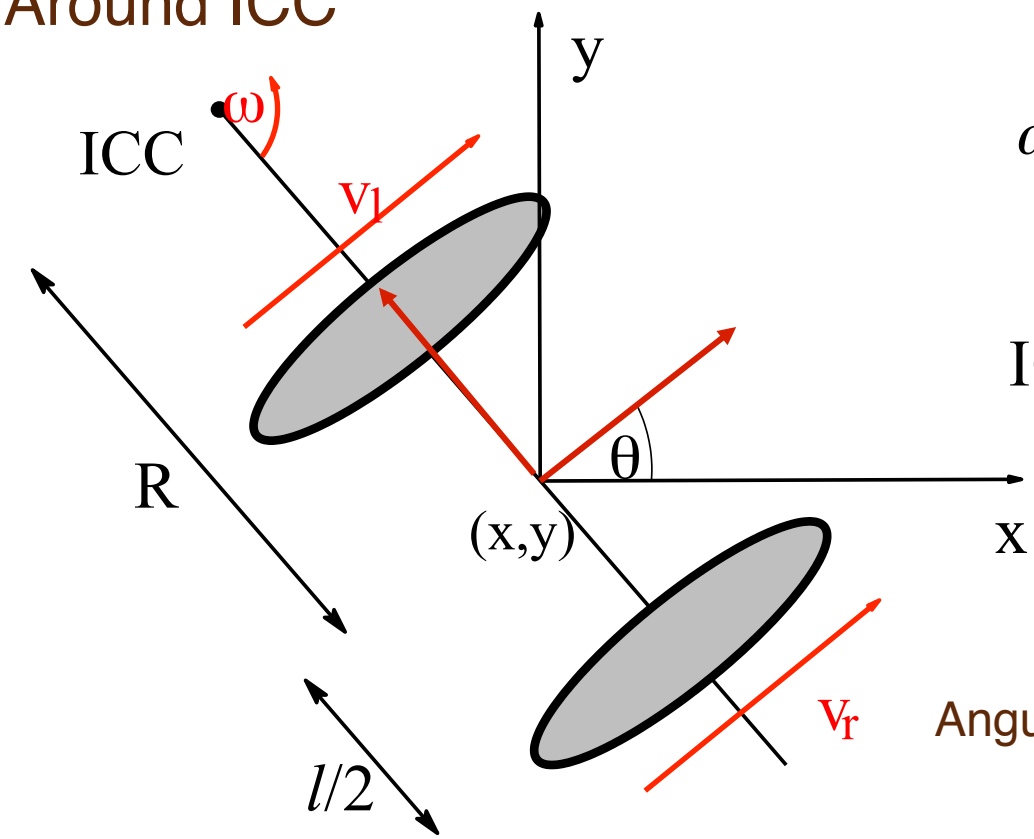

$$\omega = \frac{d\theta}{dt} = \frac{V}{R}$$

$$\mathrm{ICC} = [x - R\sin\theta, y + R\cos\theta]$$

Angular velocity

Differential Drive

Instantaneous linear velocity of each wheel v_l, v_r

- Angular velocity are related via R radius of the curve (subtract two equations for v_l, v_r)
- Linear velocity (add two equations for v_l, v_r)

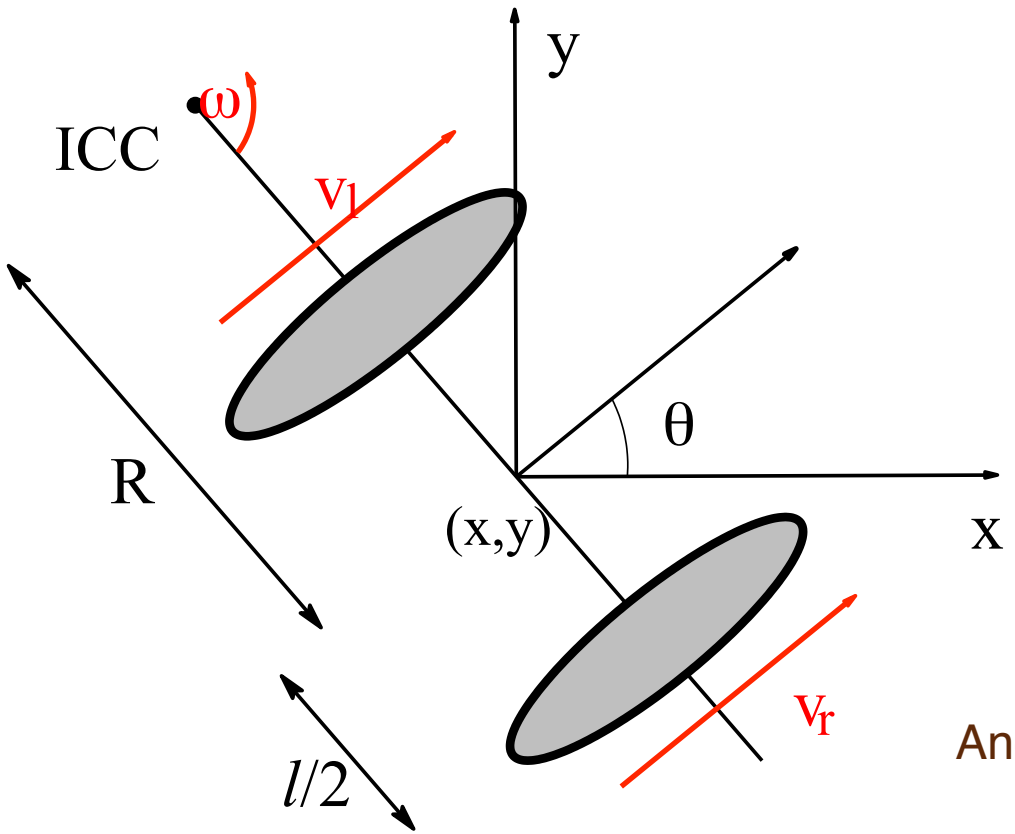

$$\omega(R + l/2) = v_r$$

$$\omega(R - l/2) = v_l$$

$$R = \frac{l}{2}\frac{(v_l + v_r)}{(v_r - v_l)}$$

$$\omega = \frac{v_r - v_l}{l}$$

$$v = \frac{v_r + v_l}{2}$$

Angular velocity $\omega = \frac{d\theta}{dt} = \frac{V}{R}$

Linear velocity v

$$\mathrm{ICC} = [x - R\sin\theta, y + R\cos\theta]$$

Differential Drive: Intuition

- When both wheels turn with the same speed robot goes straight $v_r = v_l$
- When one wheel turns faster then the other robot turns
- When the wheels turn in opposite direction the robot turns in place $v_r = -v_l$

$$\omega(R + l/2) = v_r$$

$$\omega(R - l/2) = v_l$$

$$R = \frac{l}{2}\frac{(v_l + v_r)}{(v_r - v_l)}$$

- We can solve for ω rate of rotation around ICC two special cases
- Turn in place $v_r = v_l \rightarrow \omega = 0$
- Go straight $v_r = -v_l \rightarrow R = 0$

$$\omega = \frac{v_r - v_l}{l}$$

$$v = \frac{v_r + v_l}{2}$$

Differential Drive

- Linear and angular velocities in the robot body frame

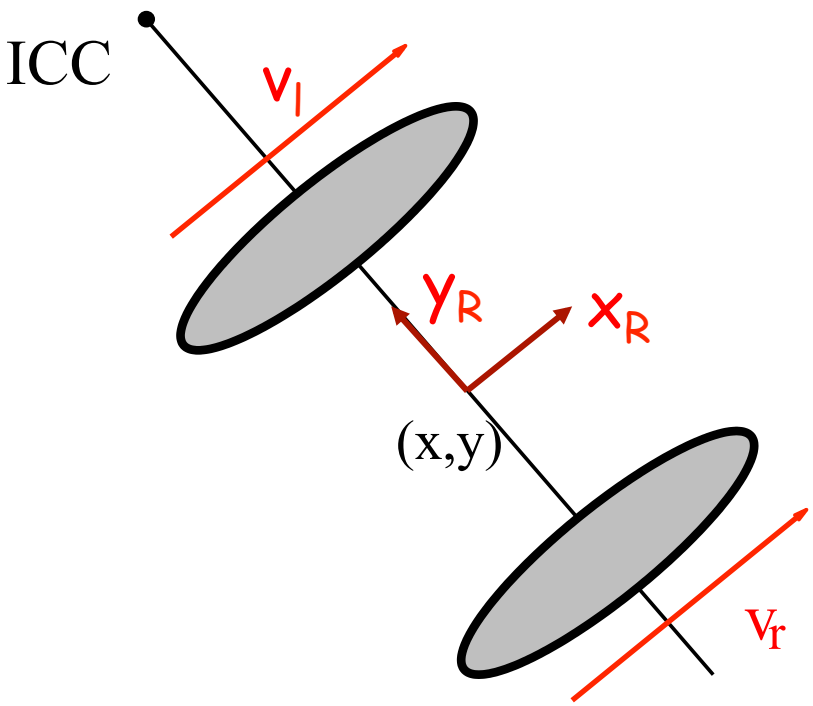

$$\begin{bmatrix} v_{x,R} \\ v_{y,R} \\ \omega \end{bmatrix} = \begin{bmatrix} \frac{1}{2}(v_l + v_r) \\ 0 \\ \frac{1}{2}(v_r - v_l) \end{bmatrix}$$

$$v = [v_x, v_y]$$

$$\omega = \dot{\theta}$$

Representing Robot Position

- Previously the velocities were expressed in the robot coordinate frame
- Representing to robot within an arbitrary initial frame
  - Initial frame: $\{X_I, Y_I\}$
  - Robot frame: $\{X_R, Y_R\}$
  - Robot pose: $\xi_I = [x \quad y \quad \theta]^T$

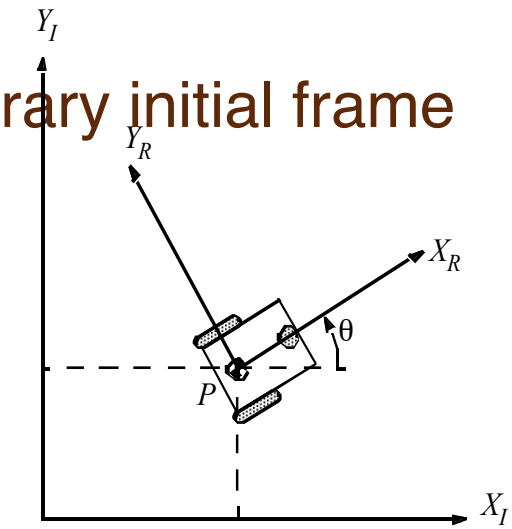

  - Mapping between the two frames

$$R(\theta) = \begin{bmatrix} \cos\theta & \sin\theta & x \\ -\sin\theta & \cos\theta & y \\ 0 & 0 & 1 \end{bmatrix}$$

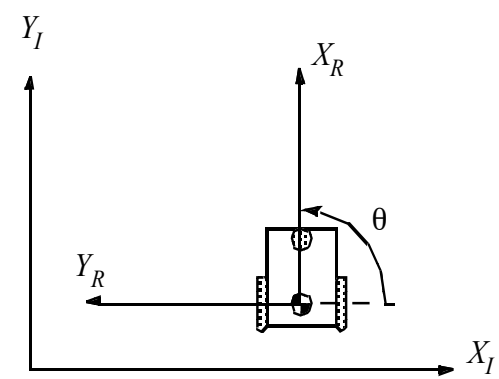

  - Example: Robot aligned with Y_I

Representing Robot Position

- Representing to robot within an arbitrary initial frame
  - Initial frame: $\{X_I, Y_I\}$
  - Robot frame: $\{X_R, Y_R\}$
  - Robot pose: $\xi_I = [x \quad y \quad \theta]^T$
  - Robot velocities: $\xi_I = [x \quad y \quad \theta]^T$
  - Mapping between the two frames
  - Maps motion from global reference frame to robot reference frame

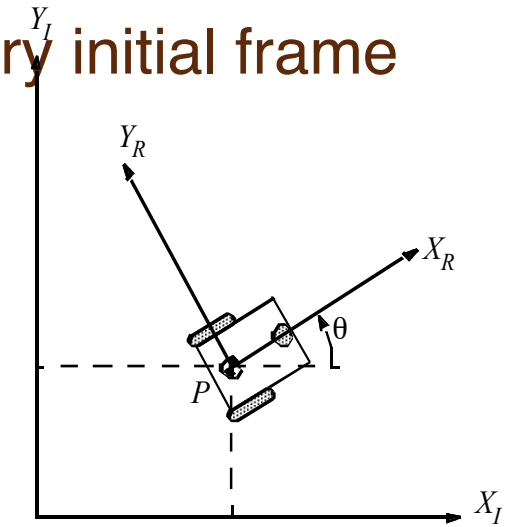

$$R(\theta) = \begin{bmatrix} \cos\theta & \sin\theta & x \\ -\sin\theta & \cos\theta & y \\ 0 & 0 & 1 \end{bmatrix}$$

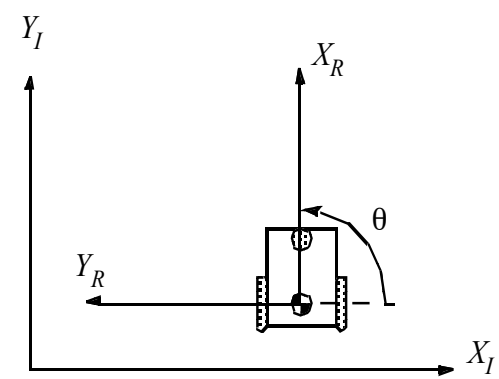

  - Example: Robot aligned with Y_I

Forward kinematics

- Given a robot at some pose and moving at some angular and linear velocity ω, v during time period *t,* determine the pose of the robot
- Given some trajectory $x(t), y(t), \theta(t)$ functions of time, so are $\omega(t), v(t)$
- We cannot simply obtain forward kinematics
- We need to use the whole history

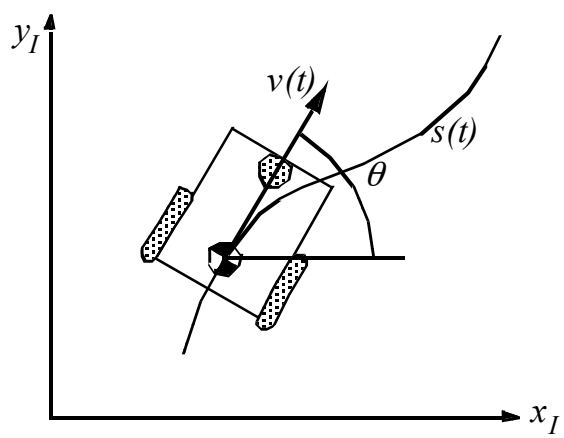

Representing Robot Position

- Representing to robot within an arbitrary initial frame
  - Initial frame: $\{X_I, Y_I\}$
  - Robot frame: $\{X_R, Y_R\}$
  - Robot pose: $\xi_I = [x \quad y \quad \theta]^T$
  - We control v, ω in the robot frame
  - Differential robot drive instantaneously moves along x axis $v = [v_x, v_y]^T = [v_x, 0]^T$
  - Velocities in the world frame are

$$\begin{bmatrix} \dot{x} \\ \dot{y} \end{bmatrix} = \begin{bmatrix} \cos\theta & -\sin\theta \\ \sin\theta & \cos\theta \end{bmatrix} \begin{bmatrix} v \\ 0 \end{bmatrix}$$

$$\dot{\theta} = \omega$$

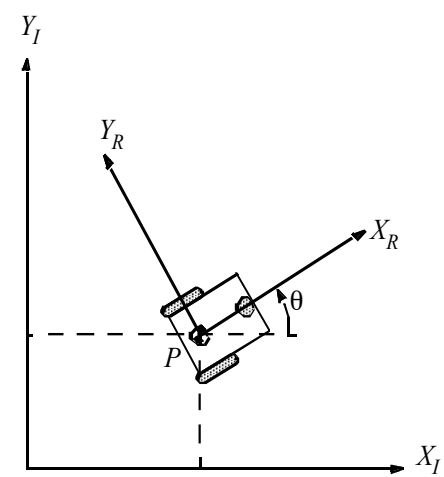

  - Relates velocities in world frame to robot frame

Robots motion

– Velocities in the world frame are

$$\dot{x} = v\cos\theta$$

$$\dot{y} = v\sin\theta$$

$$\dot{\theta} = \omega$$

– With the following controls

$$\omega = \frac{v_r - v_l}{l}$$

$$v = \frac{v_r + v_l}{2}$$

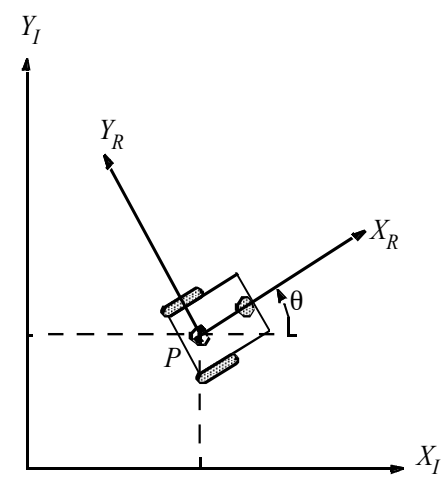

Differential Drive: Forward Kinematics

- To compute the trajectory we need to integrate the equations

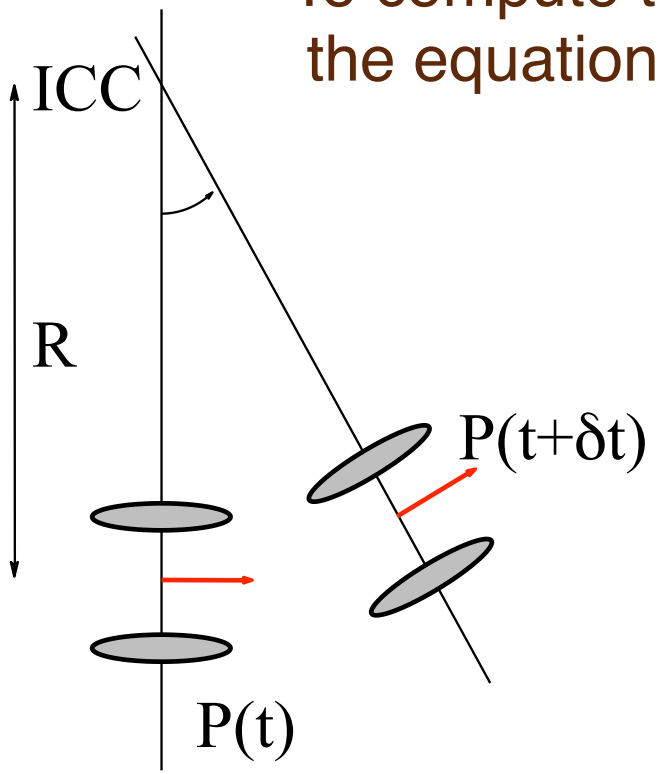

$$x(t) = \int_0^t v(t') \ \cos[\theta(t')]dt'$$

$$y(t) = \int_0^t v(t') \ \sin[\theta(t')]dt'$$

$$\theta(t) = \int_0^t \omega(t') \ dt'$$

Differential Drive: Forward Kinematics

- To compute the trajectory we need to integrate the equations

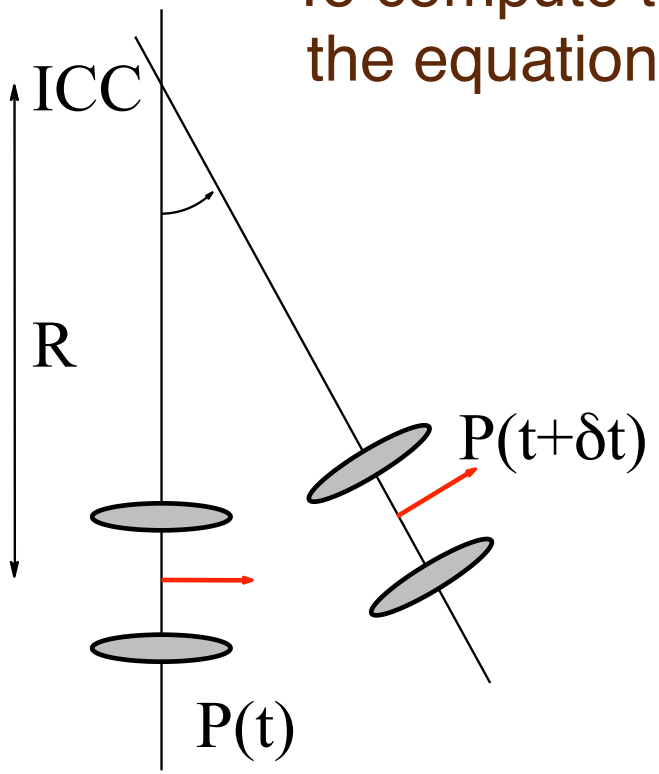

$$x(t) = \frac{1}{2}\int_0^t [v_r(t') + v_l(t')] \ \cos[\theta(t')]dt'$$

$$y(t) = \frac{1}{2}\int_0^t [v_r(t') + v_l(t')] \ \sin[\theta(t')]dt'$$

$$\theta(t) = \frac{1}{l}\int_0^t [v_r(t') - v_l(t')] \, dt'$$

Differential Drive

- Integral cannot be solved analytically
- $\omega(t), v(t)$ are functions of time
- Option 1: consider special cases of straight line motion and rotation only
- Option 2: simulate the differential equation (see notes)

Unicycle

- Another commonly used model for mobile robots
- Could be viewed as abstract version of differential drive
- Parameters: wheel radius, pedaling velocity, linear velocity, angular velocity controlled directly

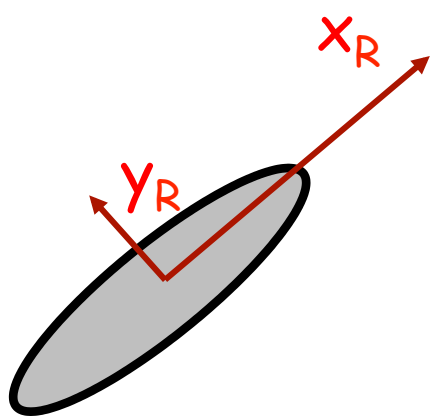

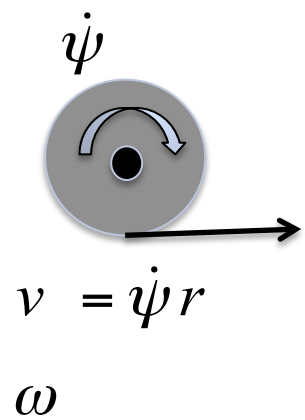

- Linear and angular velocity can be controlled directly

Robot's Motion

- Velocities in the world frame are (same as diff. drive)

$$\dot{x} = v\cos\theta$$
$$\dot{y} = v\sin\theta$$
$$\dot{\theta} = \omega$$

- Except linear and angular velocities can be controlled directly

Other models

- Car kinematics model (Ackerman steering)
- Steering angle, forward speed

$$\dot{x} = v_x \cos\theta$$

$$\dot{y} = v_x \sin\theta$$

$$\dot{\theta} = \frac{\tan\phi}{L} v_x$$

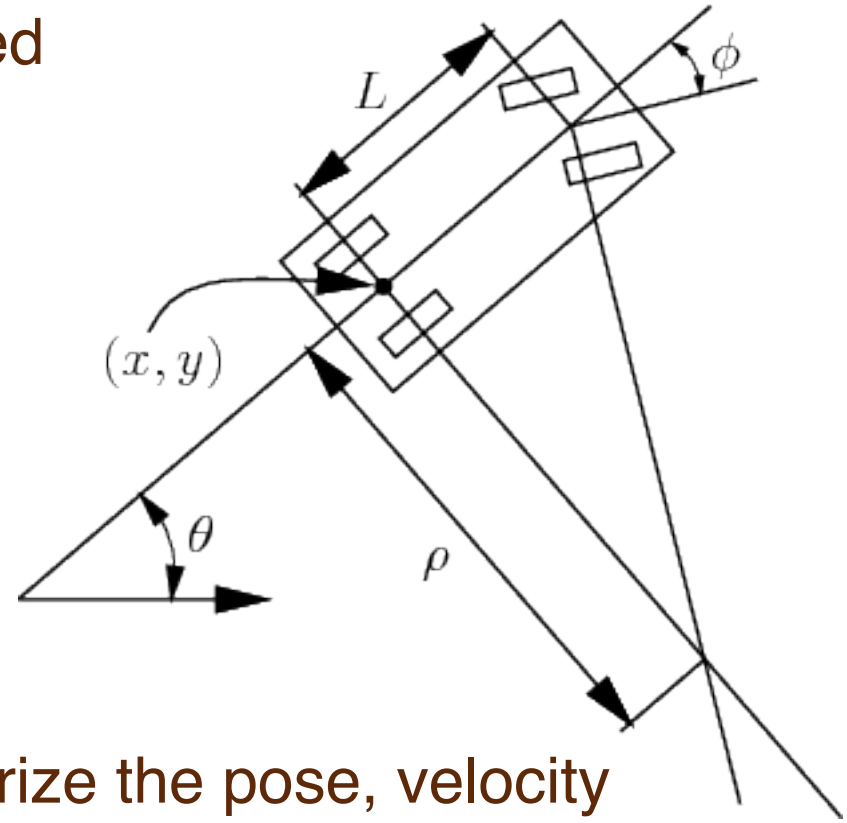

- Tractor-trailer model

- Ingredients: how to characterize the pose, velocity
- What are the parameters and control inputs
- See: http://planning.cs.uiuc.edu/node657.html for additional detailed derivations

Mobile Robot Kinematic Models

- Manipulator case – given joint angles, we can always tell where the end effector is
- Mobile robot basis – given wheel positions we cannot tell where the robot is
- We have to remember the history how it got there
- Need to find relationship between velocities and changes in pose
- Presented on blackboard (see handout)
- How is the wheel velocity affecting velocity of the chassis

Bicycle Kinematic model

- Similar, slightly different steering mechanism
- Bicycle model of the car
- Hind wheels move with the same speed
- Front wheels can be rotated
- L distance between form and back wheels

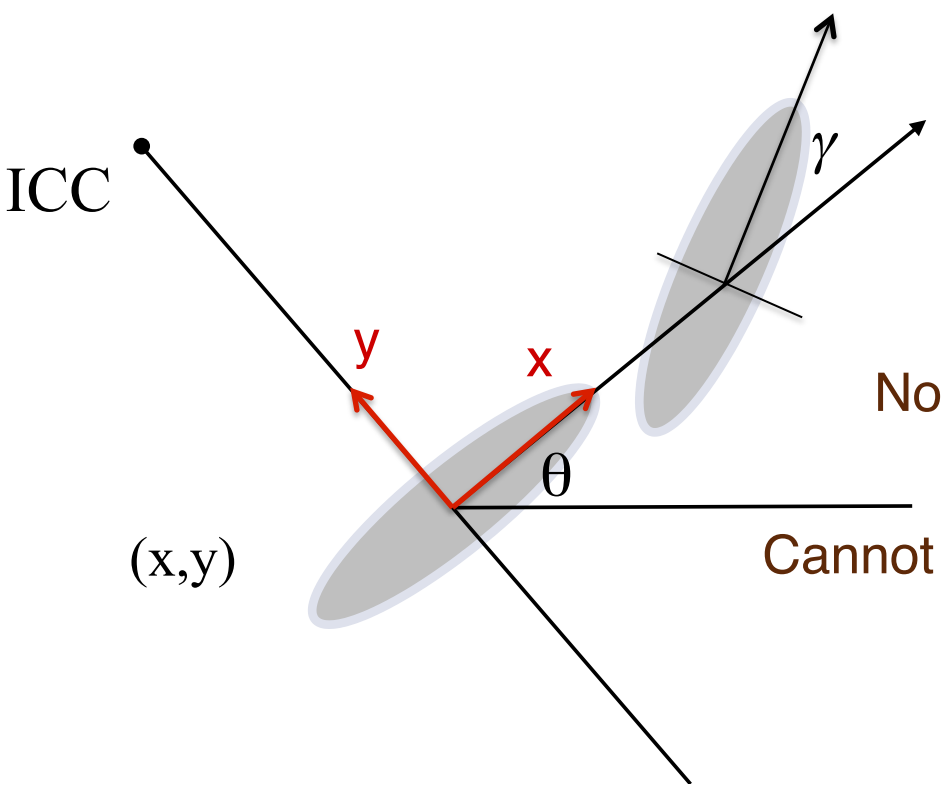

$$\dot{x} = v\cos\theta$$

$$\dot{y} = v\sin\theta$$

$$\dot{\theta} = \frac{v}{L}\tan\gamma$$

Nonholonomic velocity constraints

$$\dot{x}\cos\theta - \dot{y}\sin\theta = 0$$

Cannot change orientation not moving with *v*

$$v = 0 \rightarrow \dot{\theta} = \frac{v}{L}\tan\gamma \rightarrow \dot{\theta} = 0$$